Standard manifolds - Common cavity
Size 08 - Aluminium / Steel

CAVITY: CA-08A-2N

	Ordering code	Ports 1-2	Weight kg (lbs)
Aluminium	OC1009009 R901090786	G 1/4	0.17 (0.38)
	OC1009004 R901082022	G 3/8	0.16 (0.35)
Steel	OC1009067 R901090800	G 1/4	0.47 (1.04)
	OC1009066 R901090799	G 3/8	0.45 (0.99)

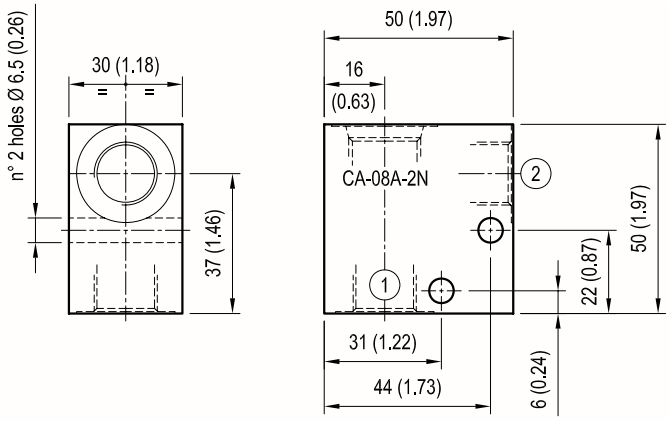

[mm / Inches]

CAVITY: CA-08A-3C

	Ordering code	Ports 1-2	Ports 3	Weight kg (lbs)
Aluminium	OC1009262 R934000223	G 1/4	G 1/4	0.25 (0.55)
	OC1009260 R934000221	G 3/8	G 1/4	0.25 (0.55)
Steel	OC1009263 R934000224	G 1/4	G 1/4	0.71 (1.57)
	OC1009261 R934000222	G 3/8	G 1/4	0.69 (1.52)

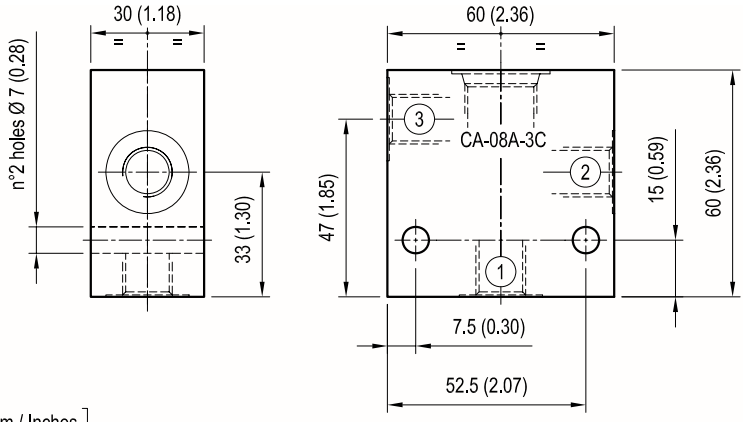

[mm / Inches]

CAVITY: CA-08A-3C
(DOUBLE CAVITY)

	Ordering code	Ports V1-V2-C1-C2	Weight kg (lbs)
Aluminium	OC1009185 R934000146	G 3/8	0.36 (0.79)
Steel	OC1009184 R934000145	G 3/8	1.00 (2.21)

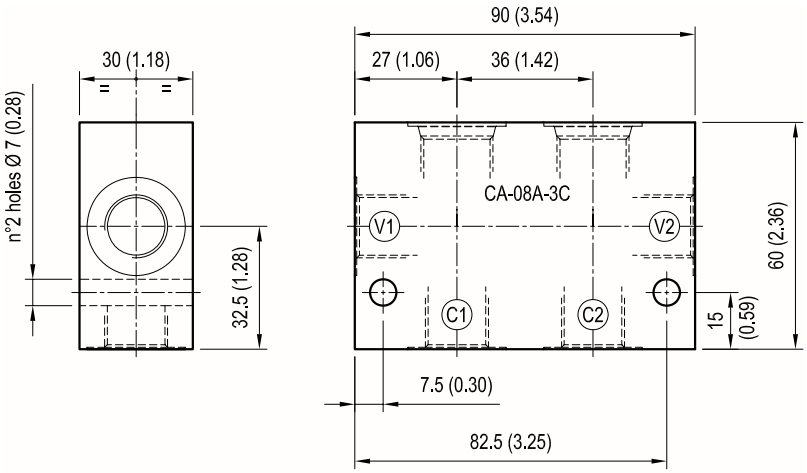

[mm / Inches]